Antuator

Antuator,Smaller for more

Hall Sensor Specification

Wire diagram for hall sensor

White	Hall sensor B Vout	Green	Hall sensor A Vout
Red	Hall sensor VCC +	Black	Hall sensor GND -
Blue	Motor-	Brown	Motor+

Hall sensor can be added to the actuator and the function of hall sensor is to provide a signal feedback to the receiver to judge the motor speed.

If we know how many signals hall sensor can produce in one circle,we will know how many signals the hall sensor can provide to the receiver when the motor runs one circle and then we can control the actuator speed and stroke precisely.

Calculation of hall sensor resolution

Hall sensor resolution=Lead screw pitch / gear ratio / pulses per revolution

Hall sensor specifications

Electrical Characteristics						
Symbol	Parameter	Test Conditions	Min.	Typ.	Max.	Units
V_{DD}	Operating voltage	$T_J < T_{J(Max.)}$	2.5	––	12	V
I_{DD}	Operating supply current	V_{DD}=2.5 to 12 V	1.5	2.5	3.5	mA
t_{on}	Power–on time		––	35	50	uS
I_{QL}	Off–state leakage current	Output Hi–Z	––	––	1	uA
R_{UP}	Internal pull–up resistor		5.0	10	15	KΩ
$R_{DS(on)}$	FET on–resistance	V_{DD}=5V, I_O=10mA, T_A=25℃	––	20	––	Ω
t_d	Output delay time	B=B_{RP} to B_{OP}	––	13	25	uS
t_r	Output rise time	R1=1Kohm Co=50pF	––	––	0.5	uS
t_f	Output fall time	R1=1Kohm Co=50pF	––	––	0.2	uS
Magnetic Characteristics						
f_{BW}	Bandwidth		40	––	––	kHz
B_{OP}	Operated point	VB Package	1.0	2.0	3.0	mT
B_{RP}	Release point		–3.0	–2.0	–1.0	mT
B_{HYS}	Hysteresis		––	4.0	––	mT
B_O	Magnetic offset	B_O=(B_{OP}+B_{RP})/2	––	0	––	mT

Thermal Characteristics				
Symbol	Parameter	Test Conditions	Rating	Units
$R_{\theta JA}$	VB Package thermal resistance	Single–layer PCB, with copper limited to solder pads	177	℃/W

Specification of hall sensor circuit

Output circuit

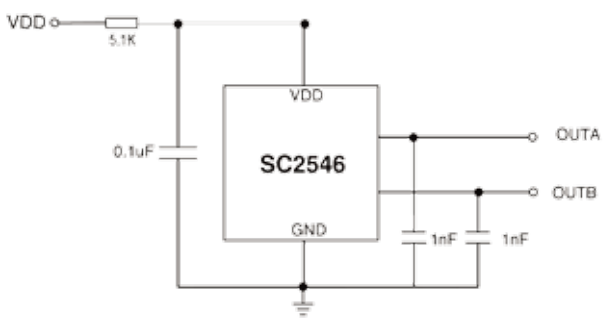

Output wave